CPU

File: CPU.kicad_sch

ROM

File: ROM.kicad_sch

Video Generation

File: Video Gen.kicad_sch

RAM Address Multiplexing

File: RAMAddressMux.kicad_sch

RAM

File: RAM.kicad_sch

IO_AddressDecode

File: IO_AddressDecode.kicad_sch

Clock Generation

File: ClockGen.kicad_sch

Connectors

File: Connectors.kicad_sch

Captured from the Apple II Reference Manual (1979)

Sheet: /
File: AppleII.kicad_sch

Title: Apple II Schematic

Size: A4	Date:	**Rev: 0**
KiCad E.D.A. 9.0.7		Id: 1/9

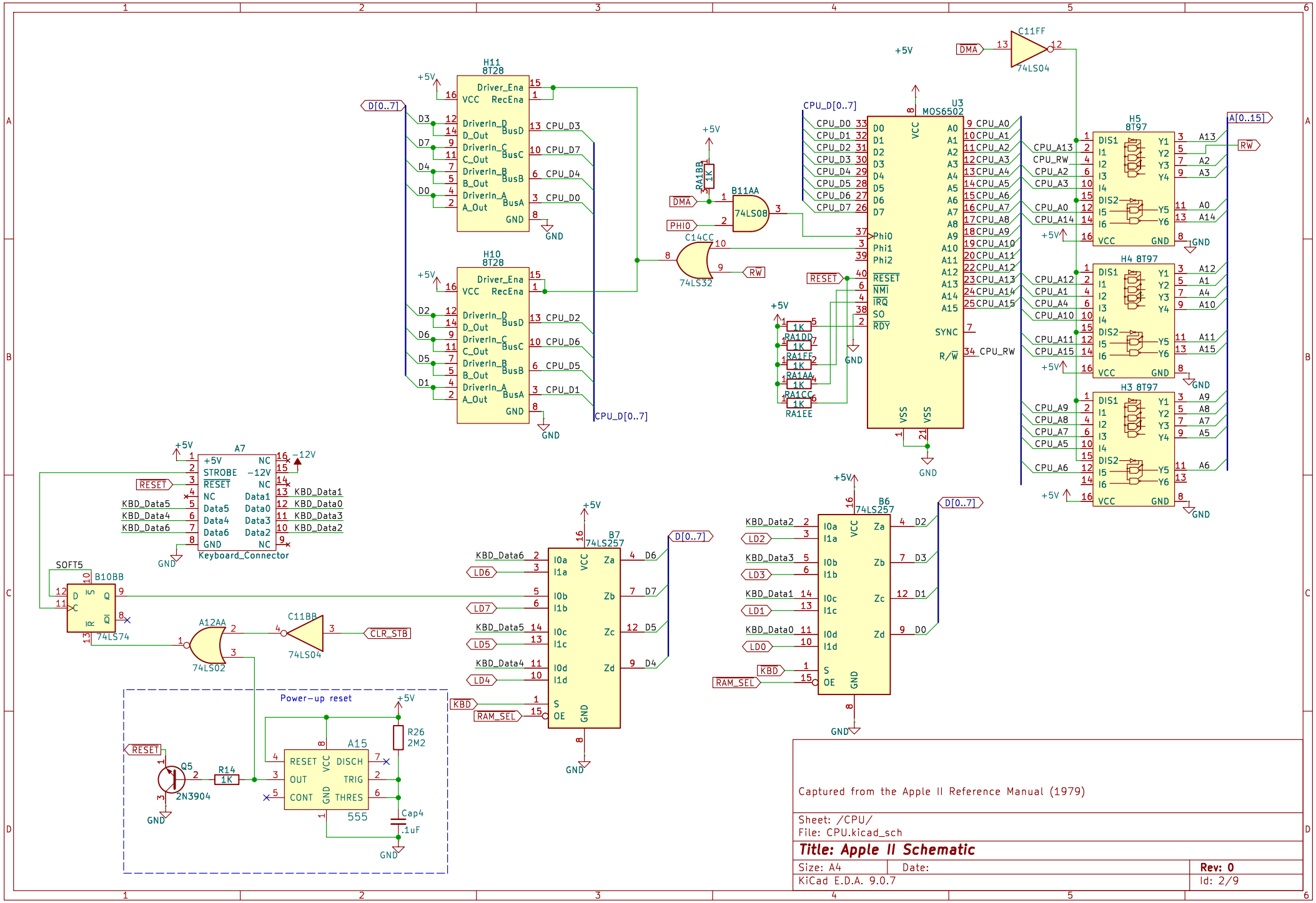
H11
8T28
H10
8T28
U3
MOS6502
C11FF
74LS04
H5
8T97
H4 8T97
H3 8T97
A7
Keyboard_Connector
B10BB
74LS74
A12AA
74LS02
C11BB
74LS04
B7
74LS257
B6
74LS257
B11AA
74LS08
C14CC
74LS32
Power-up reset
Q5
2N3904
R14
1K
A15
555
R26
2M2
Cap4
.1uF
RA1BB
RA1DD
RA1FF
RA1AA
RA1CC
RA1EE
D[0..7]
CPU_D[0..7]
A[0..15]
RESET
DMA
PHI0
RW
CLR_STB
KBD
RAM_SEL
SOFT5
+5V
-12V
GND
Captured from the Apple II Reference Manual (1979)
Sheet: /CPU/
File: CPU.kicad_sch
Title: Apple II Schematic
Size: A4
Date:
Rev: 0
KiCad E.D.A. 9.0.7
Id: 2/9

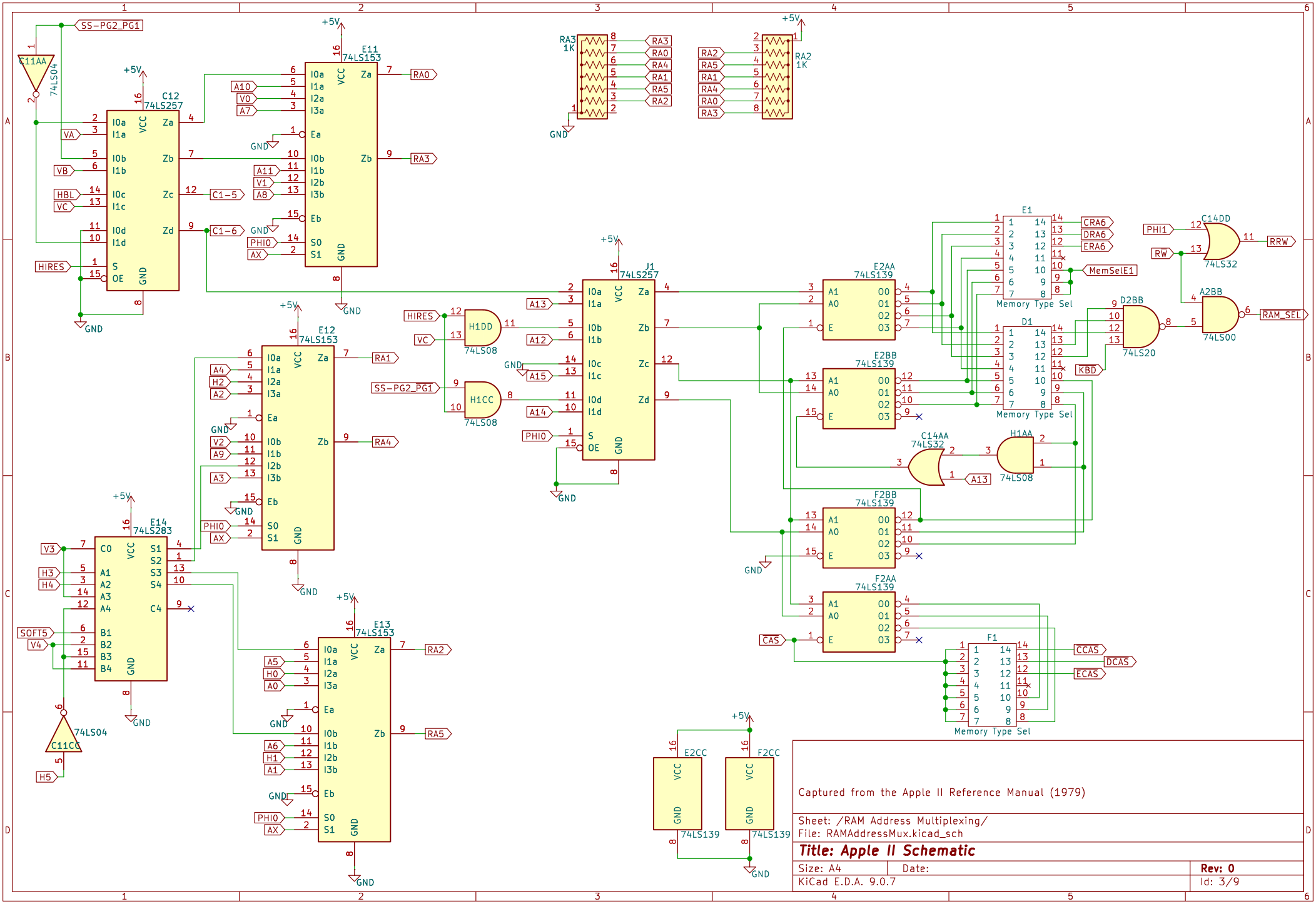
SS-PG2_PG1
C11AA
74LS04
C12
74LS257
E11
74LS153
E12
74LS153
E13
74LS153
E14
74LS283
J1
74LS257
RA3
1K
RA2
1K
H1DD
H1CC
74LS08
E2AA
E2BB
F2BB
F2AA
74LS139
E1
D1
F1
Memory Type Sel
C14DD
74LS32
A2BB
74LS00
D2BB
74LS20
C14AA
H1AA
C11CC
E2CC
F2CC
Captured from the Apple II Reference Manual (1979)
Sheet: /RAM Address Multiplexing/
File: RAMAddressMux.kicad_sch
Title: Apple II Schematic
Size: A4
Date:
Rev: 0
KiCad E.D.A. 9.0.7
Id: 3/9

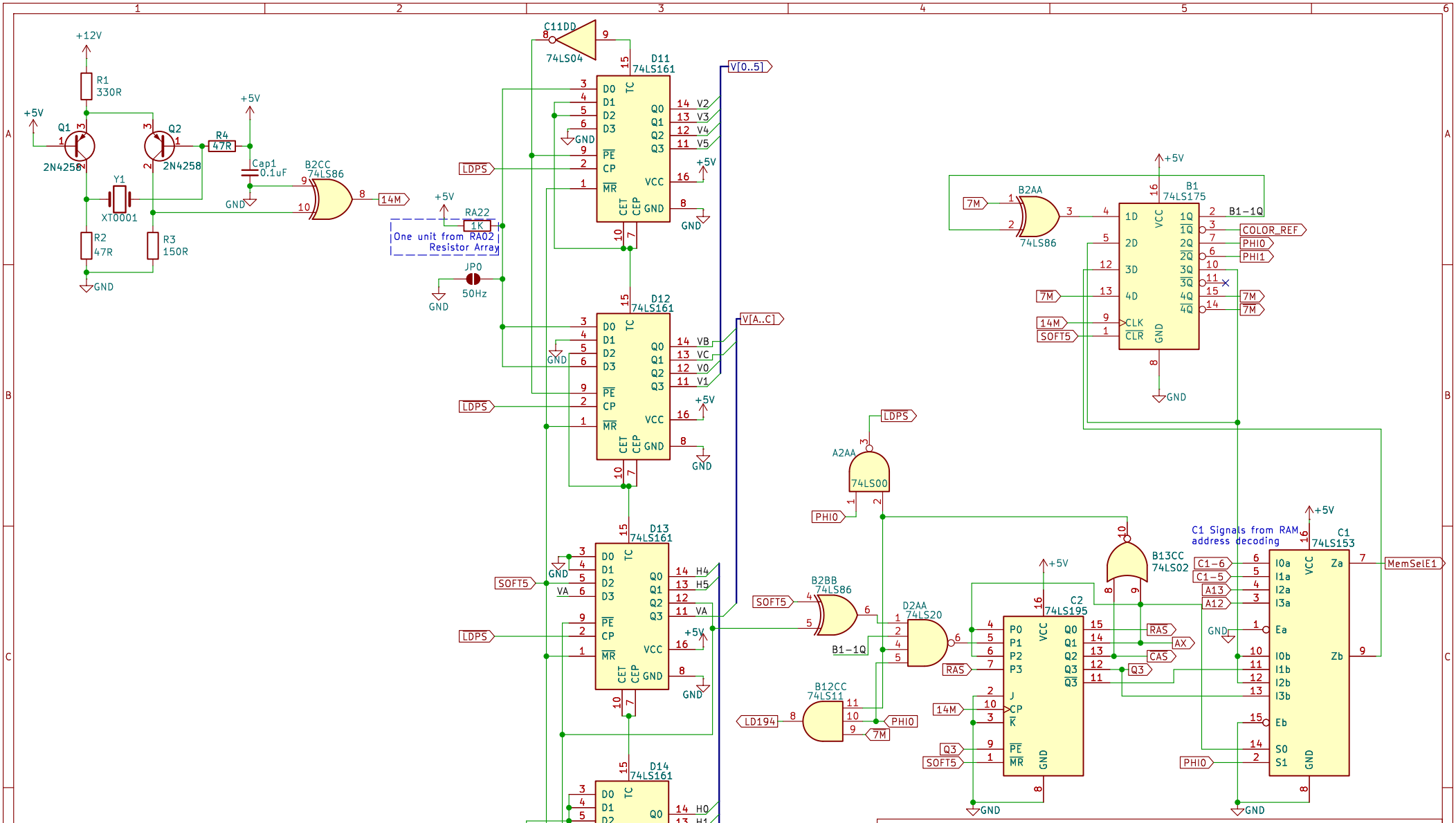

Captured from the Apple II Reference Manual (1979)

Sheet: /Clock Generation/
File: ClockGen.kicad_sch

Title: Apple II Schematic

Size: A4	Date:	Rev: 0
KiCad E.D.A. 9.0.7		Id: 4/9

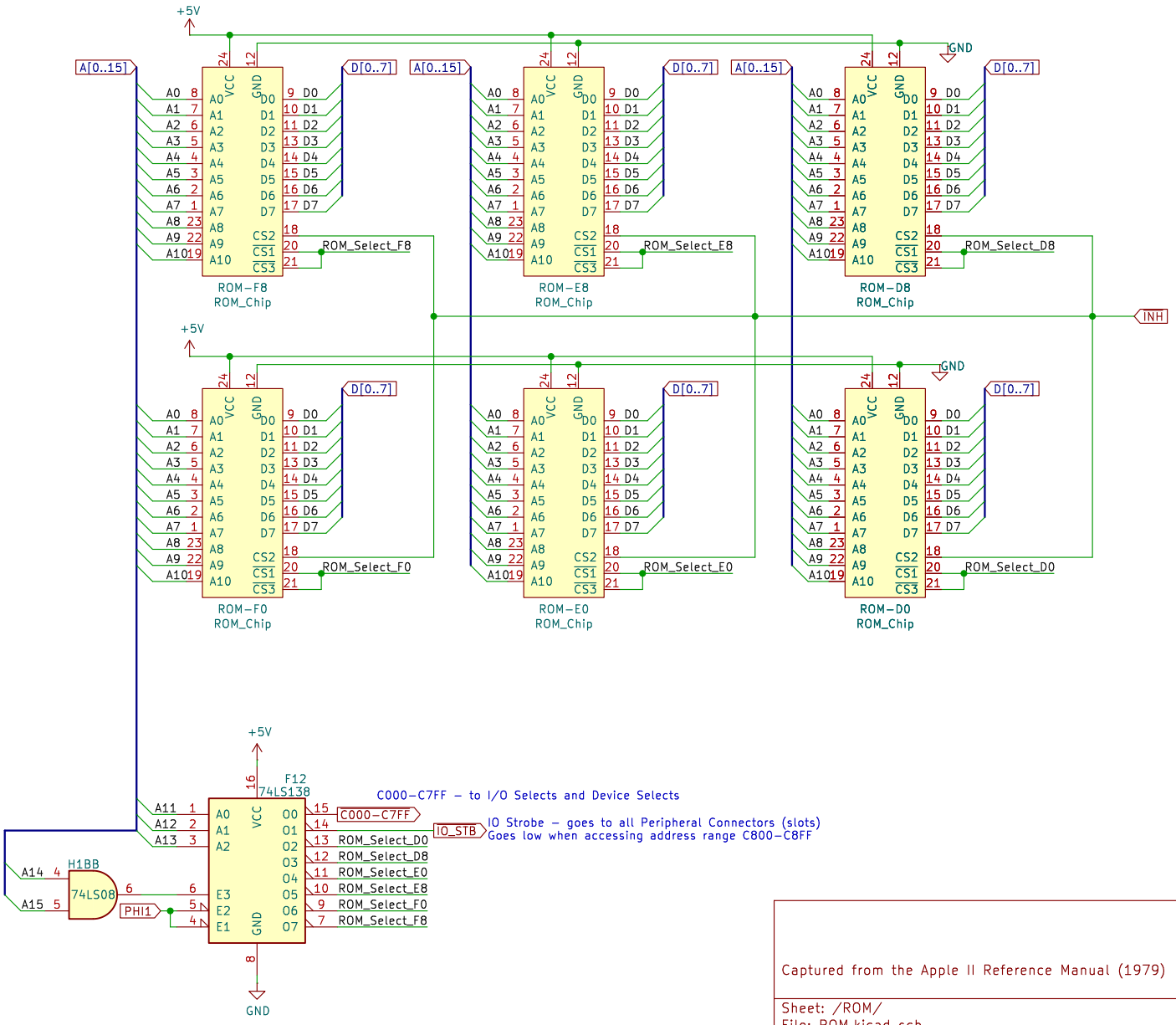

Captured from the Apple II Reference Manual (1979)

Sheet: /ROM/
File: ROM.kicad_sch

Title: Apple II Schematic

Size: A4	Date:	Rev: 0
KiCad E.D.A. 9.0.7		Id: 5/9

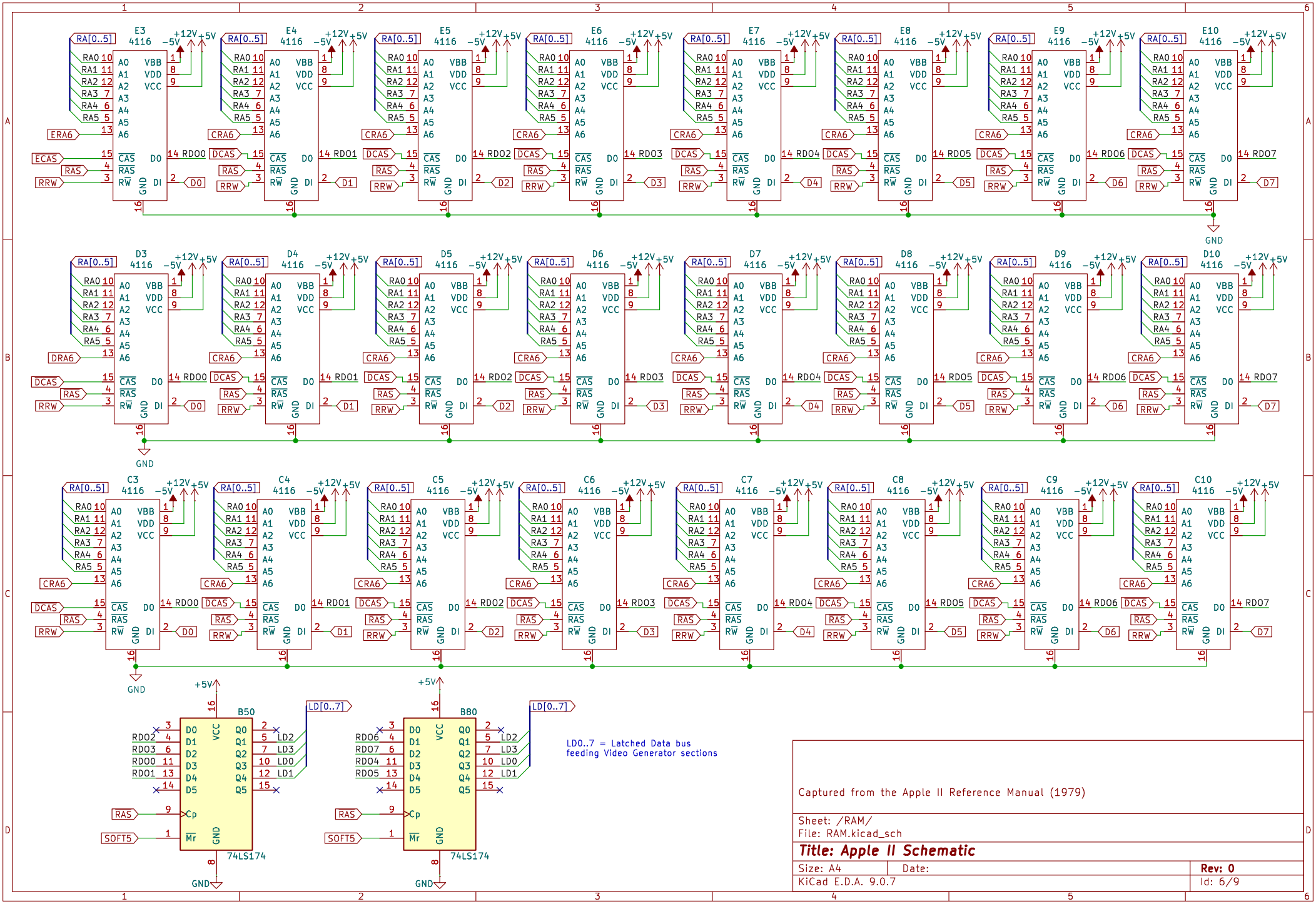

Captured from the Apple II Reference Manual (1979)

Sheet: /RAM/
File: RAM.kicad_sch

Title: Apple II Schematic

Size: A4	Date:	Rev: 0
KiCad E.D.A. 9.0.7		Id: 6/9

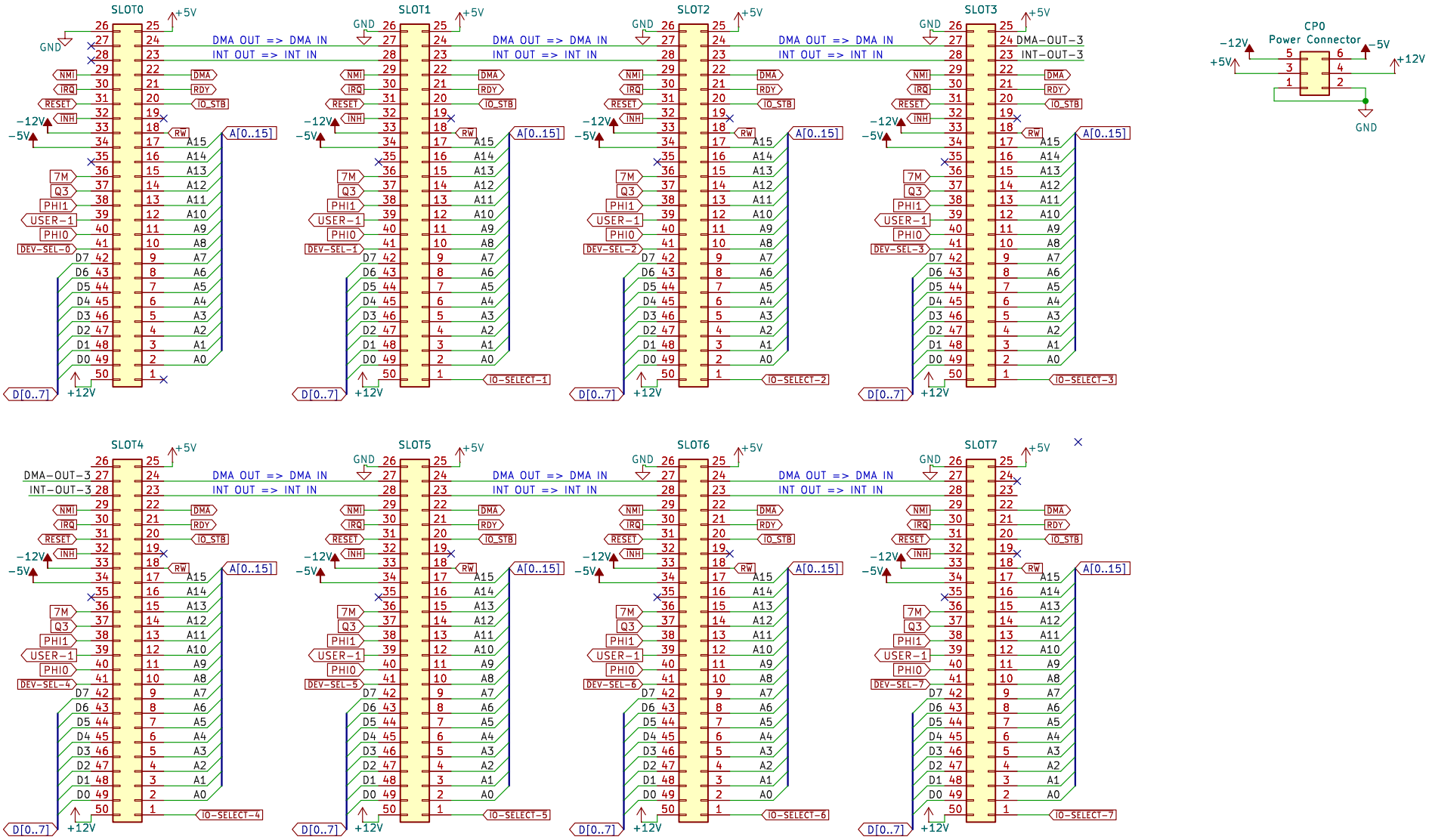

Captured from the Apple II Reference Manual (1979)

Sheet: /Connectors/
File: Connectors.kicad_sch

Title: Apple II Schematic

Size: A4	Date:	Rev: 0
KiCad E.D.A. 9.0.7		Id: 7/9

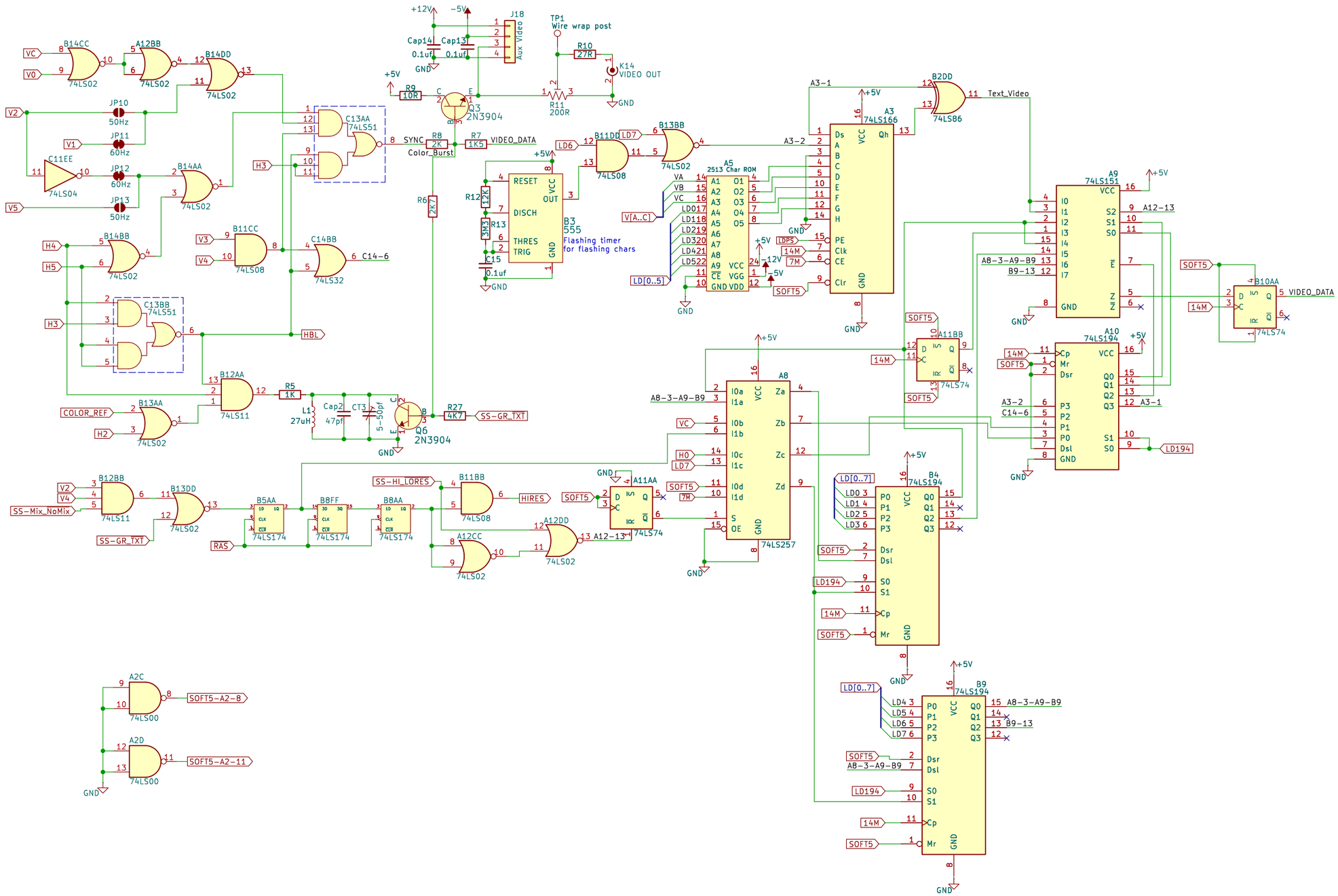

Captured from the Apple II Reference Manual (1979)

Sheet: /Video Generation/
File: Video Gen.kicad_sch

Title: Apple II Schematic

Size: A3	Date:	Rev: 0
KiCad E.D.A. 9.0.7		Id: 8/9

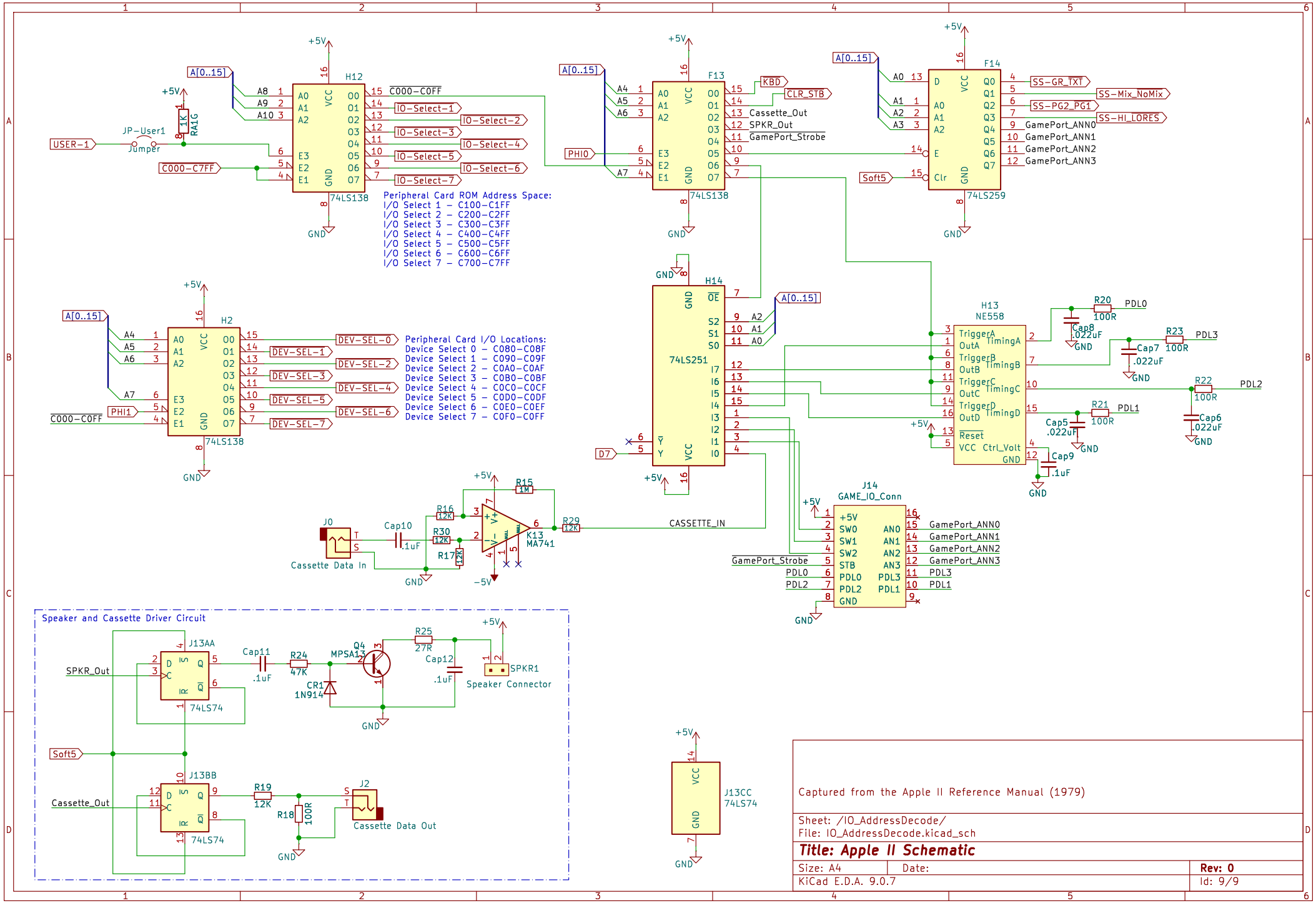
H12
74LS138
A[0..15]
C000-C0FF
IO-Select-1
IO-Select-2
IO-Select-3
IO-Select-4
IO-Select-5
IO-Select-6
IO-Select-7
USER-1
JP-User1
Jumper
RA1G
1K
C000-C7FF
Peripheral Card ROM Address Space:
I/O Select 1 - C100-C1FF
I/O Select 2 - C200-C2FF
I/O Select 3 - C300-C3FF
I/O Select 4 - C400-C4FF
I/O Select 5 - C500-C5FF
I/O Select 6 - C600-C6FF
I/O Select 7 - C700-C7FF
F13
74LS138
PHI0
KBD
CLR_STB
Cassette_Out
SPKR_Out
GamePort_Strobe
F14
74LS259
Soft5
SS-GR_TXT
SS-Mix_NoMix
SS-PG2_PG1
SS-HI_LORES
GamePort_ANN0
GamePort_ANN1
GamePort_ANN2
GamePort_ANN3
H2
74LS138
PHI1
DEV-SEL-0
DEV-SEL-1
DEV-SEL-2
DEV-SEL-3
DEV-SEL-4
DEV-SEL-5
DEV-SEL-6
DEV-SEL-7
Peripheral Card I/O Locations:
Device Select 0 - C080-C08F
Device Select 1 - C090-C09F
Device Select 2 - C0A0-C0AF
Device Select 3 - C0B0-C0BF
Device Select 4 - C0C0-C0CF
Device Select 5 - C0D0-C0DF
Device Select 6 - C0E0-C0EF
Device Select 7 - C0F0-C0FF
H14
74LS251
D7
H13
NE558
R20 100R
R23 100R
R22 100R
R21 100R
PDL0
PDL3
PDL2
PDL1
Cap8 .022uF
Cap7 .022uF
Cap6 .022uF
Cap5 .022uF
Cap9 .1uF
J14
GAME_IO_Conn
J0
Cassette Data In
Cap10 .1uF
R16 12K
R30 12K
R17 12K
R15 1M
R29 12K
K13
MA741
CASSETTE_IN
Speaker and Cassette Driver Circuit
J13AA
74LS74
J13BB
74LS74
Cap11 .1uF
R24 47K
CR1 1N914
Q4 MPSA13
R25 27R
Cap12 .1uF
SPKR1
Speaker Connector
R19 12K
R18 100R
J2
Cassette Data Out
J13CC
74LS74
Captured from the Apple II Reference Manual (1979)
Sheet: /IO_AddressDecode/
File: IO_AddressDecode.kicad_sch
Title: Apple II Schematic
Size: A4
Date:
Rev: 0
KiCad E.D.A. 9.0.7
Id: 9/9